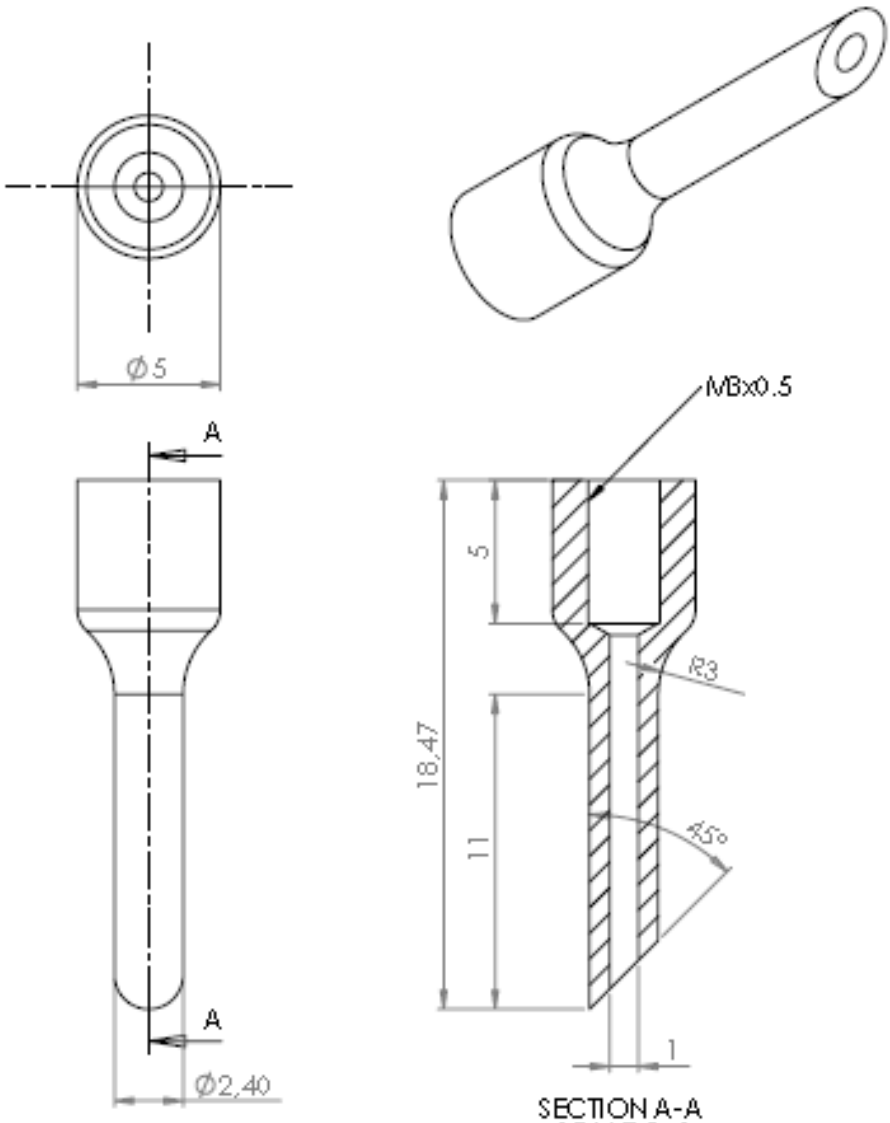

UNLESS OTHERWISE SPECIFIED: DIMENSIONS ARE IN MILLIMETERS SURFACE FINISH: TOLERANCES: LINEAR: ANGULAR:	FINISH:		DEBURR AND BREAK SHARP EDGES	DO NOT SCALE DRAWING		REVISION
				Juan Sebastian Elejalde S		
	NAME	SIGNATURE	DATE	TITLE:		
DRAWN						
CHKD						
ENG APPD						
MFG APPD						
Q.A.				MATERIAL: 304 Inoxidable	DWG NO. adaptador	A4
				WEIGHT:	SCALE: 5:1	SHEET 1 OF 1