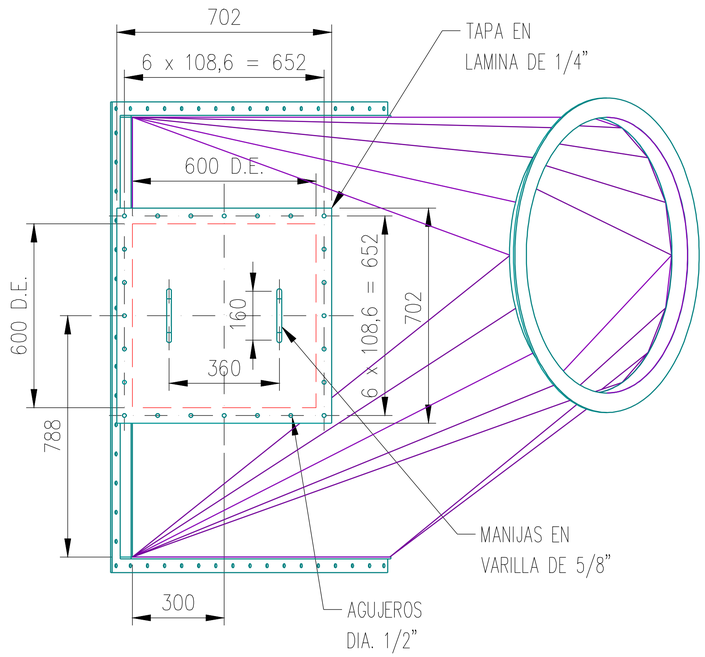

VISTA POR "A"

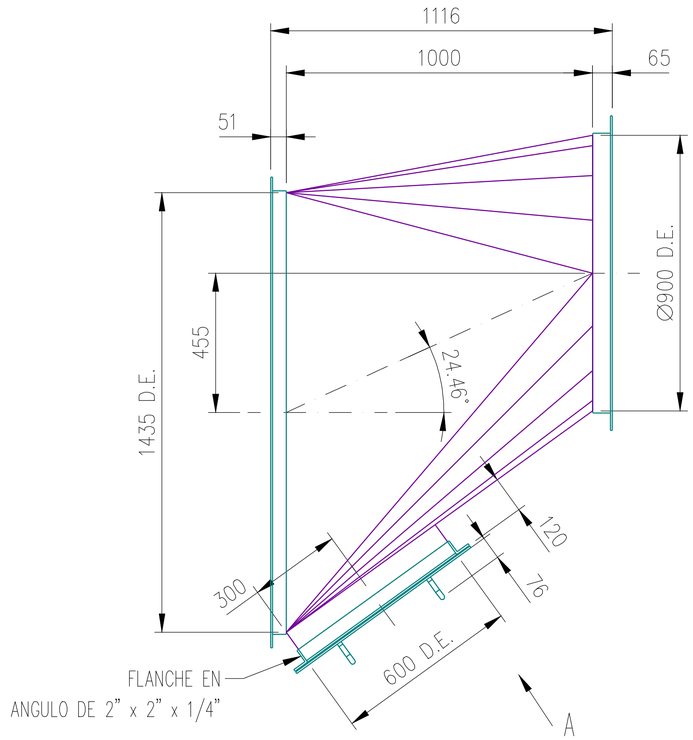

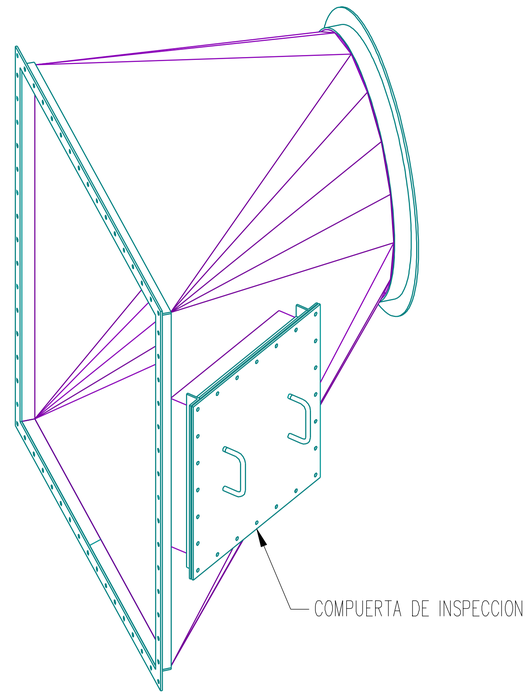

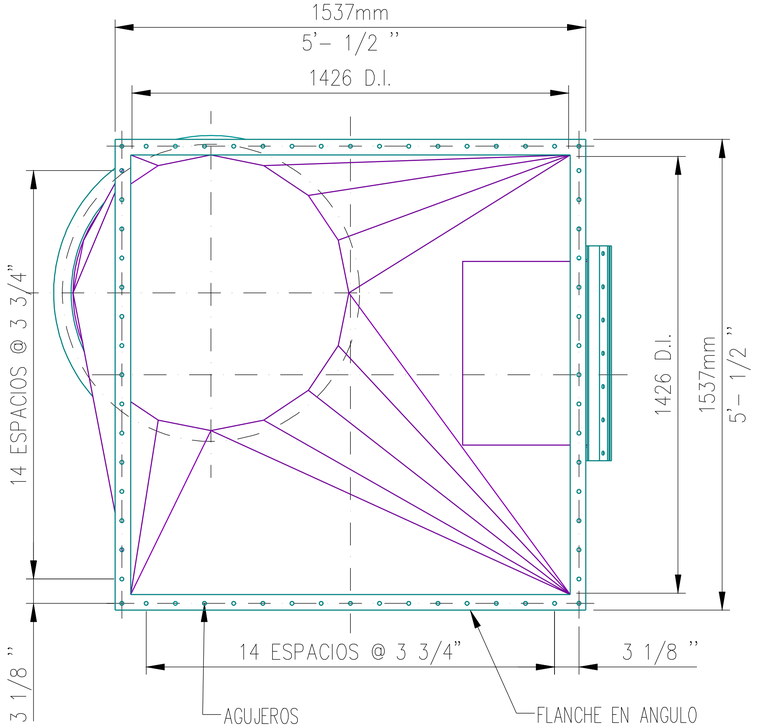

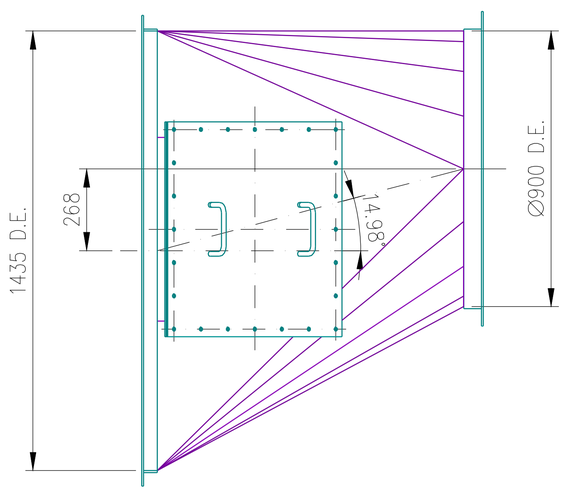

NOTA:
MATERIAL DE LA TRANSICION
EN LAMINA CAL. 3/16"

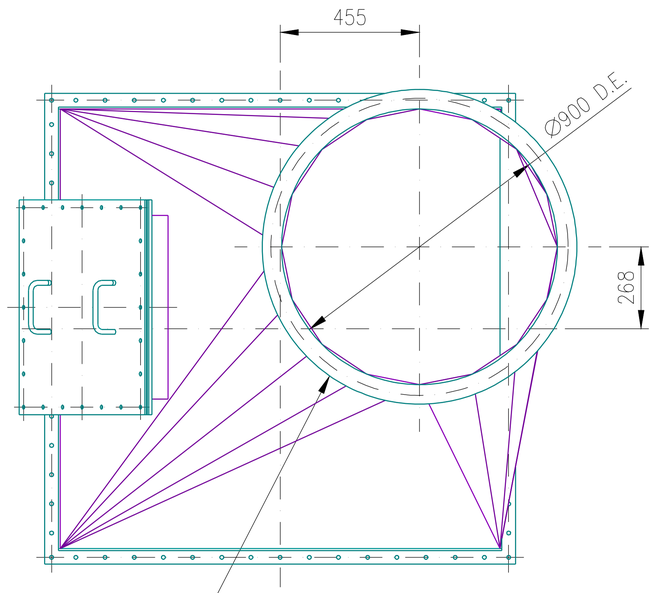

FLANCHE EN ANGULO
DE 2 1/2 x 2 1/2 x 1/4
LOS AGUJEROS PARA EL FLANCHE
DEBEN SER PLANTILLADOS EN EL SITIO

SoftCAD
DISEÑO POR COMPUTADOR
CALLE 27 SUR No. 45-141
MEDELLIN-COLOMBIA
TEL. 3348260 - CEL. 300-2760948

PLOT DATE: THU OCT 30 05:13:18 2003

"INFORMATION CONTAINED HEREIN CONSTITUTES PROPRIETARY CONFIDENTIAL AND TRADE SECRET INFORMATION OF O-I PELDAR S.A.. AND IS TO BE ACCEPTED SUBJECT TO THAT UNDERSTANDING. IT IS TO BE KEPT CONFIDENTIAL AND NOT TO BE COPIED, USED OR CONVEYED TO OTHERS WITHOUT O-I PELDAR WRITTEN AUTHORIZATION."

DETAIL NUMBER / REFERENCE SHEET NO. — DET. & SECT. SYMBOL

Peldar
ENGINEERING DEPARTMENT- ENVIGADO, COLOMBIA

NO.	DATE	REVISION	REV BY	CHECK'D BY	APP'V'D BY	M

DRAWN BY Y.G. DATE 30/07/07
DIRECTORY:
FILE:
SCALE: 1:10
CHECKED BY E.F. DATE 01/08/07
APPROVED BY A.J. DATE 01/08/07
PROJECT NUMBER

TRANSICION #2 ENSAMBLE

INTERCAMBIADOR VENTILADOR C-1
PLANT NO. 112 ENVIGADO, COLOMBIA

SHEET NUMBER 4
REV
DRAWING NUMBER 200716-04

SCALING RULES 1:5 1:2 1:1